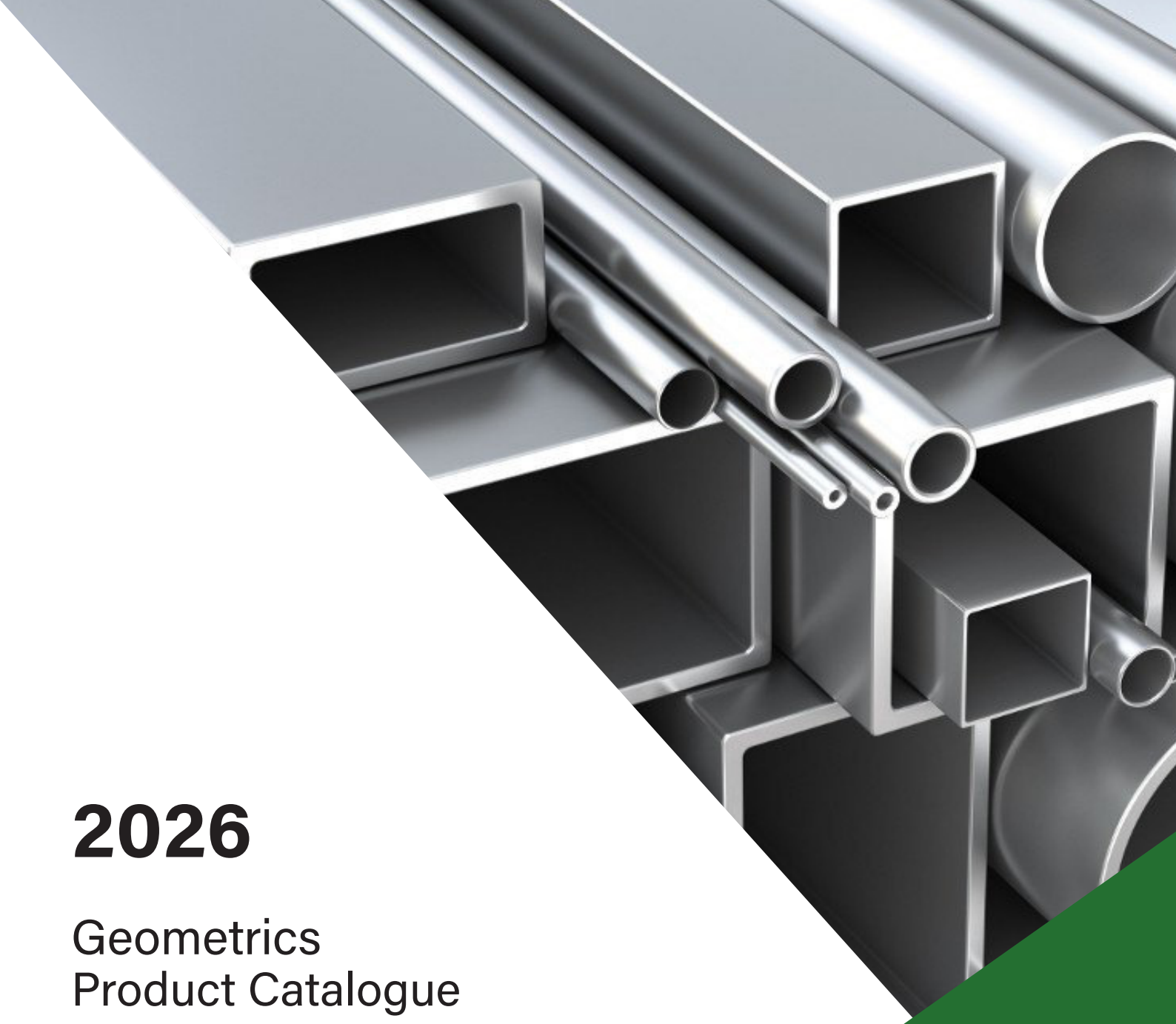

2026

Geometrics
Product Catalogue

CONCEPT ALUMINIUM SYSTEMS

Providing premium total aluminium solutions.

Our Company

CAS began providing high quality powder coating in 1989. Today, we offer total aluminium solutions, specialises in crafting premium aluminium window and door systems

What sets us apart is our dedication to developing commercial-grade systems tailored for architectural homes. Whether you're building a new home, renovating, or undertaking a large development, CAS windows and doors are designed to deliver unparalleled value and quality to your project.

We collaborate closely with our product development team and local architects to ensure our systems meet the specific needs of Australian designers and excel under Australian building conditions, including in energy efficiency and sustainability. At CAS, we take pride in our client relationships and actively incorporate their feedback to refine and enhance our products. This commitment ensures that our offerings not only meet but exceed industry standards.

Contact us today,

03 9357 2888

Sales@conceptaluminium.com.au

www.conceptaluminium.com.au

Contents

04 Angles

06 Channels

07 Flat Bars

09 Square Hollow Sections (SHS)

10 Rectangular Hollow Sections (RHS)

11 Flat Alloy Sheets

11 5 Bar Tread plate

Powder Coated Angles

We stock a selection of angles in our Standard Colours range. Perfect for closing off small gaps in window installations, and as general purpose trims.

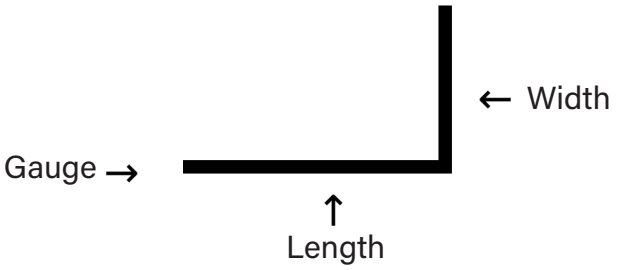

PRODUCT CODE	LENGTH	WIDTH	GAUGE	BAR LENGTH
A201216	20	12	1.6	6500
A252016	25	20	1.6	6500
A322016	32	20	1.6	6500
A402016	40	20	1.6	6500
A502516	50	25	1.6	6500
A702516	70	25	1.6	6500

Standard Range

Black Satin

Dune Satin

Jasper Satin

Monument Satin

Paperbark Matt

Pearl White Gloss

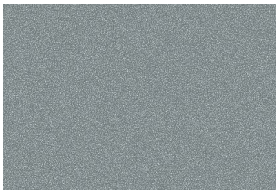
Precious Silver Kinetic Pearl Satin

Primrose Gloss

Shale Grey Satin

Surfmist Satin

Woodland Grey Matt

Angles

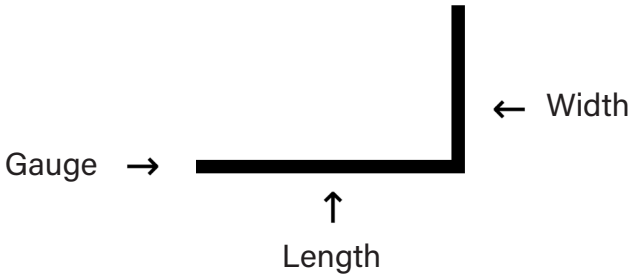

PRODUCT CODE	LENGTH	WIDTH	GAUGE	BAR LENGTH	MILL	PRE-TREATED	ANODISED
A121216	12	12	1.6	6500	▪		#
A201216	20	12	1.6	6500			▪
A20123	20	12	3	6500	▪		#
A202016	20	20	1.6	6500	▪	▪	#
A20203	20	20	3	6500	▪		#
A251216	25	12	1.6	6500	▪		#
A252016	25	20	1.6	6500			▪
A25203	25	20	3	6500	▪	▪	#
A252516	25	25	1.6	6500	▪	▪	▪
A25253	25	25	3	6500	▪		▪
A322016	32	20	1.6	6500			▪
A32253	32	25	3	6500	▪		#
A323216	32	32	1.6	6500	▪	▪	▪
A32323	32	32	3	6500	▪		▪
A401216	40	12	1.6	6500	▪		#
A402016	40	20	1.6	6500			▪
A40203	40	20	3	6500	▪		#
A40253	40	25	3	6500	▪	▪	#
A404016	40	40	1.6	6500	▪		▪
A40403	40	40	3	6500	▪		▪
A502516	50	25	1.6	6500			▪
A50253	50	25	3	6500	▪		#
A505016	50	50	1.6	6500	▪	▪	▪
A50503	50	50	3	6500	▪		▪
A702516	70	25	1.6	6500			▪
A704016	70	40	1.6	6500	▪		
A76763	76	76	3	6500	▪	▪	
A904016	90	40	1.6	6500	▪		
A100253	100	25	3	6500	▪		
A100503	100	50	3	6500	▪		
A100506	100	50	6	6500	#		
A125503	125	50	3	6500	#		
A2001008	200	100	8	6500	▪	▪	▪

▪ Stocked item
Buy in product. Lead times apply

All available sections can be powder coated as required. Lead times apply.

Channels

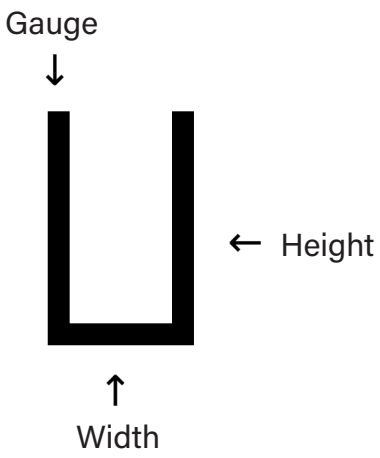

PRODUCT CODE	WIDTH	HEIGHT	GAUGE	BAR LENGTH	MILL	PRE-TREATED	ANODISED
C121216	12	12	1.6	6500	▪		▪
C161616	16	16	1.6	6500	▪		▪
C16163	16	16	3	6500	▪		#
C201616	20	16	1.6	6500	▪		#
C202016	20	20	1.6	6500	▪		#
C20203	20	20	3	6500	▪		#
C25123	25	12	3	6500	▪		#
C252516	25	25	1.6	6500	▪		#
C25253	25	25	3	6500	▪		▪
C25403	25	40	3	6500	▪		▪
C32253	32	25	3	6500	▪		▪
C32323	32	32	3	6500	▪		▪
C40203	40	20	3	6500	#		#
C40253	40	25	3	6500	▪		#
C40403	40	40	3	6500	▪		#
C50253	50	25	3	6500	▪		#
C50503	50	50	3	6500	▪		#
C100253	100	25	3	6500	▪		

▪ Stocked item
Buy in product. Lead times apply

All available sections can be powder coated as required. Lead times apply.

Flat Bars

Gauge →

↑
Length

PRODUCT CODE	LENGTH	GAUGE	BAR LENGTH	MILL	PRE-TREATED	ANODISED
FB123	12	3	4000	▪		#
FB163						
FB2016	20	1.6	3600	▪		#
FB203	20	3	4000	▪		#
FB204	20	4	4000	#		#
FB206	20	6	4000	#		#
FB2010	20	10	4000	#		#
FB2516	25	1.6	4000	▪		#
FB256	25	6	4000	▪		#
FB323	32	3	3600	▪		#
FB3210	32	10	4000	#		#
FB403	40	3	4000	▪		#
FB406	40	6	4000	▪		#
FB503	50	3	4000	▪		#
FB506	50	6	4000	▪		#
FB5010	50	10	4000	▪		#
FB603	60	3	3600	▪		#
FB6012	60	12	4000	▪		#
FB803	80	3	3600	▪		#
FB806	80	6	4000	#		#
FB8010	80	10	4000	#		#

▪ Stocked item
Buy in product. Lead times apply

All available sections can be powder coated as required. Lead times apply.

Flat Bars

Gauge →

↑
Length

PRODUCT CODE	LENGTH	GAUGE	BAR LENGTH	MILL	PRE-TREATED	ANODISED
FB10016	100	1.6	3600	▪		▪
FB1003	100	3	4000	▪		#
FB1006	100	6	4000	▪		#
FB10010	100	10	4000	#		#
FB15016	150	1.6	3600	▪		▪

▪ Stocked item
Buy in product. Lead times apply

All available sections can be powder coated as required. Lead times apply.

Square Hollow Sections (SHS)

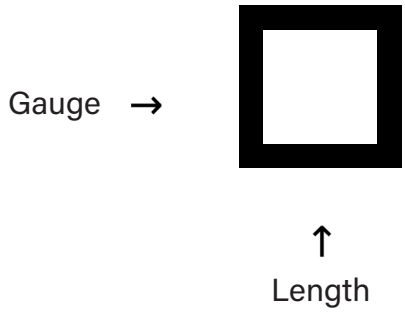

PRODUCT CODE	LENGTH	GAUGE	BAR LENGTH	MILL	PRE-TREATED	ANODISED
SHS2016	20	1.6	6500	▪		
SHS203	20	3	6500	▪		
SHS2516	25	1.6	6500	▪		
SHS253	25	3	6500	▪		
SHS3216	32	1.6	6500	▪		
SHS323	32	3	6500	▪		
SHS4016	40	1.6	6500	▪		
SHS4025	40	2.5	6500	#		
SHS403	40	3	6500	▪		
SHS5016	50	1.6	6500	▪		
SHS5025	50	2.5	6500	#		
SHS503	50	3	6500	▪		
SHS753	75	3	6500	▪		
SHS1003	100	3	6500	▪		

▪ Stocked item
Buy in product. Lead times apply

All available angles can be powder coated as required. Lead times apply.

Rectangular Hollow Sections (RHS)

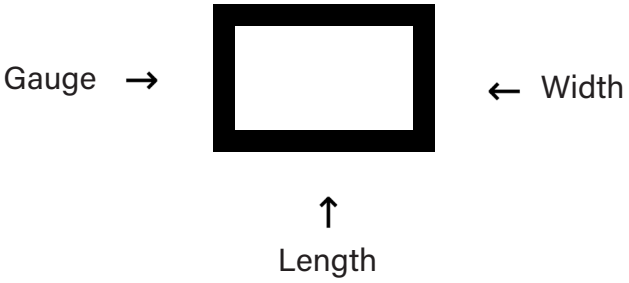

PRODUCT CODE	WIDTH	LENGTH	GAUGE	BAR LENGTH	MILL	PRE-TREATED	ANODISED
RHS382516	38	25	1.6	6500	▪		
RHS40203	40	20	3	6500	▪		
RHS402525	40	25	2.5	6500	#		
RHS501016	50	10	1.6	6500	#		
RHS50253	50	25	3	6500	▪		
RHS50383	50	38	3	6500	▪		
RHS60403	60	40	3	6500	#		
RHS762516	76	25	1.6	6500	▪		
RHS76503	76	50	3	6500	#		
RHS80503	80	50	3	6500	▪		
RHS100253	100	25	3	6500	▪		
RHS1005016	100	50	1.6	6500	▪		
RHS100503	100	50	3	6500	▪		
RHS150503	150	50	3	6500	▪		
RHS200503	200	50	3	6500	▪		

▪ Stocked item
Buy in product. Lead times apply

All available angles can be powder coated as required. Lead times apply.

Flat Alloy Sheet

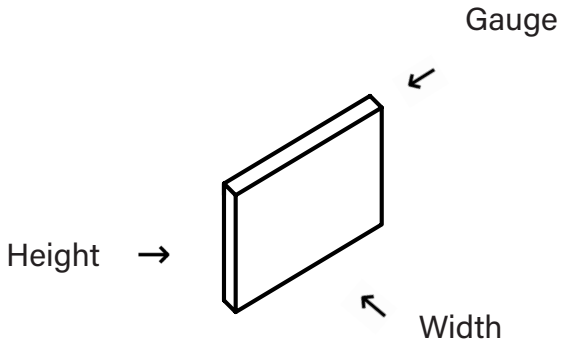

PRODUCT CODE	WIDTH	LENGTH	GAUGE	MILL	ANODISED
CS1.612002400	2400	1200	1.6	▪	▪
CS1.612003000	3000	1200	1.6	▪	▪
CS1.612003600	3600	1200	1.6	▪	▪

5 Bar Tread plate

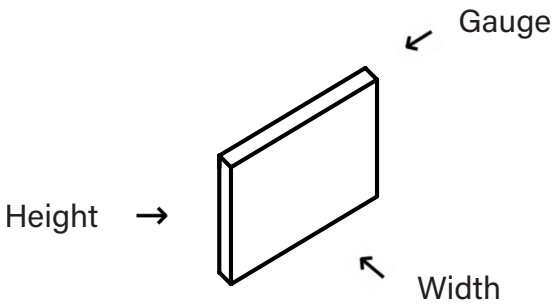

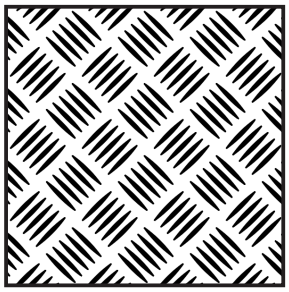

PRODUCT CODE	WIDTH	LENGTH	GAUGE	MILL	ANODISED
TP1.512002400	2400	1200	1.5	▪	▪

▪ Stocked item
Buy in product. Lead times apply

All available angles can be powder coated as required. Lead times apply.

CONCEPT ALUMINIUM SYSTEMS™

AluRES AluCOMM AluBREAK AluSHIELD

17 Broadfield Rd Broadmeadows VIC 3047

03 9357 2888

www.conceptaluminium.com.au